Power

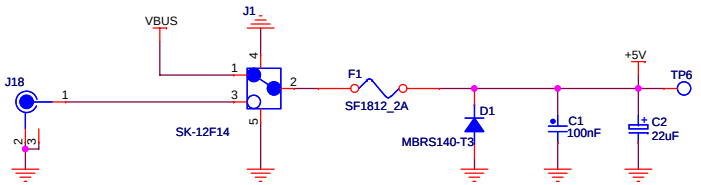

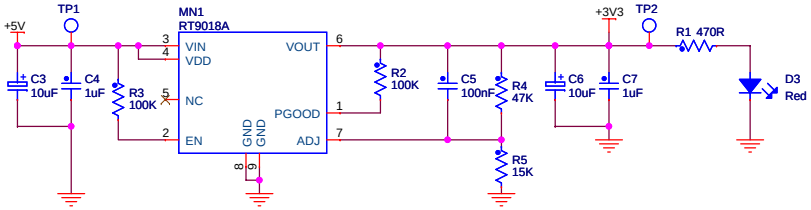

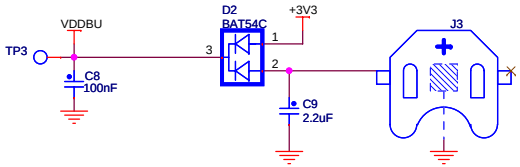

MYiR	http://www.myir-tech.com	
	Title: MYD-LPC435X/185X	
Size: A3	Document Number: POWER SUPPLY	Rev: A
Draw By: MYIR	Date: Monday, December 10, 2012	Sheet: 1 of 12

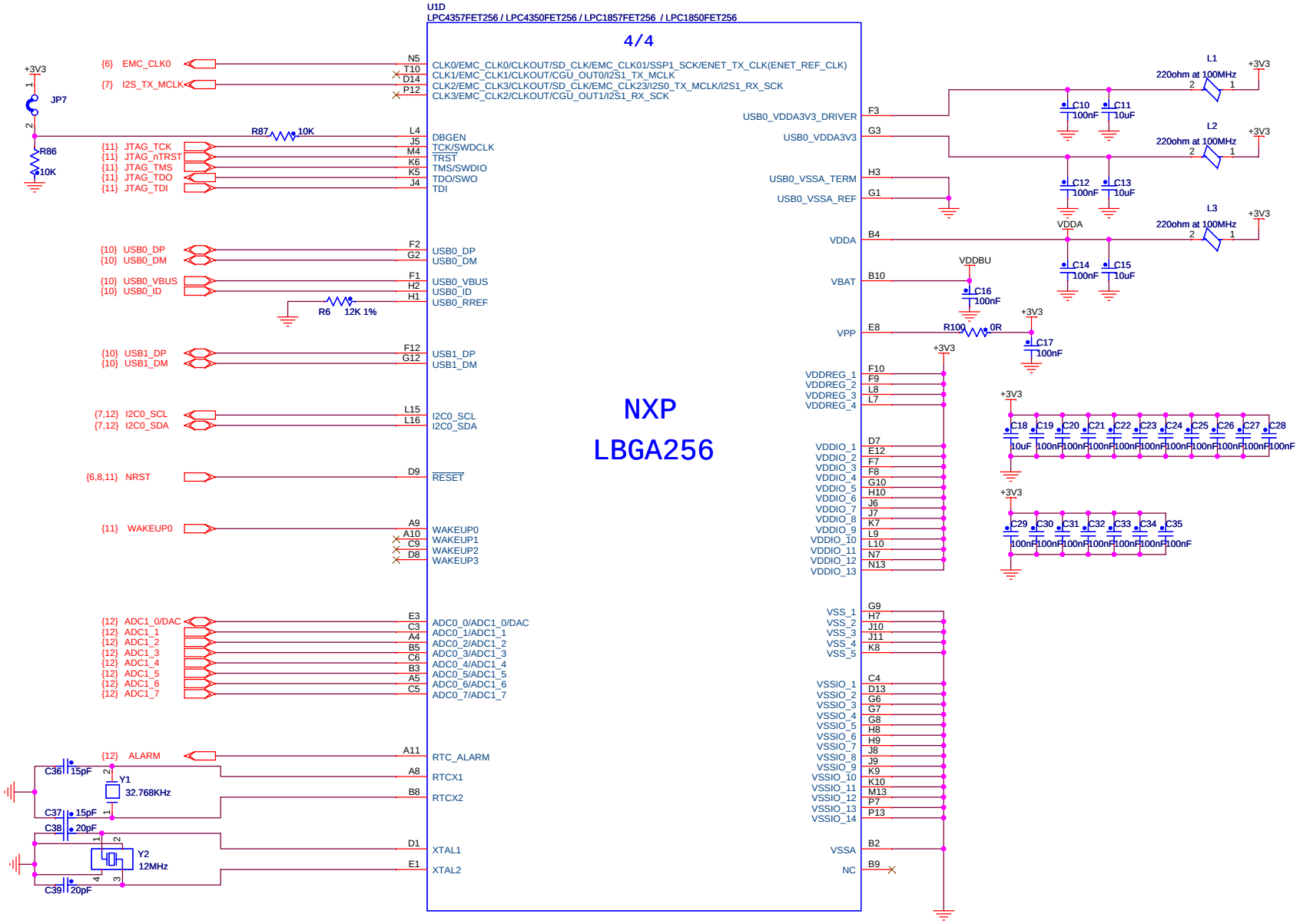

MYiR	http://www.myir-tech.com	
	Title: MYD-LPC435X/185X	
Size: A3	Document Number: LPC435X/185X-I	Rev: A
Draw By: MYIR	Date: Monday, July 22, 2013	Sheet: 2 of 12

U1A
LPC4357FET256 / LPC4350FET256 / LPC1857FET256 / LPC1850FET256

1/4

{8} ETH_RXD1			L3	P0_0/GPIO0[0]/SSP1_MISO/ENET_RXD1/I2S0_TX_WS/I2S1_TX_WS
{8} ETH_TX_EN			M2	P0_1/GPIO0[1]/SSP1_MOSI/ENET_COL/ENET_TX_EN/I2S1_TX_SDA
{6} EMC_A5		EMC_A5	P2	P1_0/GPIO0[4]/CTIN_3/EMC_A5/SSP0_SSEL
{6,11} EMC_A6		EMC_A6	R2	P1_1/GPIO0[8]/CTOUT_7/EMC_A6/SSP0_MISO/_____boot_mode
{6,11} EMC_A7		EMC_A7	R3	P1_2/GPIO0[9]/CTOUT_6/EMC_A7/SSP0_MOSI/_____boot_mode
{6} EMC_nOE			P5	P1_3/GPIO0[10]/CTOUT_8/EMC_OE/USB0_IND1/SSP1_MISO/SD_RST
			T3	P1_4/GPIO0[11]/CTOUT_9/EMC_BLS0/USB0_IND0/SSP1_MOSI/SD_VOLT1
{6} EMC_CS0			R5	P1_5/GPIO1[8]/CTOUT_10/EMC_CS0/USB0_PWR_FAULT/SSP1_SSEL/SD_POW
{6} EMC_nWE			T4	P1_6/GPIO1[9]/CTIN_5/EMC_WE/SD_CMD
{6} EMC_D0		EMC_D0	T5	P1_7/GPIO1[0]/U1_DSR/CTOUT_13/EMC_D0/USB0_PPWR
{6} EMC_D1		EMC_D1	R7	P1_8/GPIO1[1]/U1_DTR/CTOUT_12/EMC_D1/SD_VOLT0
{6} EMC_D2		EMC_D2	T7	P1_9/GPIO1[2]/U1_RTS/CTOUT_11/EMC_D2/SD_DAT0
{6} EMC_D3		EMC_D3	R8	P1_10/GPIO1[3]/U1_RI/CTOUT_14/EMC_D3/SD_DAT1
{6} EMC_D4		EMC_D4	T9	P1_11/GPIO1[4]/U1_CTS/CTOUT_15/EMC_D4/SD_DAT2
{6} EMC_D5		EMC_D5	R9	P1_12/GPIO1[5]/U1_DCD/EMC_D5/T0_CAP1/SD_DAT3
{6} EMC_D6		EMC_D6	R10	P1_13/GPIO1[6]/U1_TXD/EMC_D6/T0_CAP0/SD_CD
{6} EMC_D7		EMC_D7	R11	P1_14/GPIO1[7]/U1_RXD/EMC_D7/T0_MAT2
{8} ETH_RXD0			T12	P1_15/GPIO0[2]/U2_TXD/ENET_RXD0/T0_MAT1
{8} ETH_CRS			M7	P1_16/GPIO0[3]/U2_RXD/ENET_CRS/T0_MAT0/ENET_RX_DV
{8} ETH_MDIO			M8	P1_17/GPIO0[12]/U2_UCLK/ENET_MDIO/T0_CAP3/CAN1_TD
{8} ETH_TXD0			N12	P1_18/GPIO0[13]/U2_DIR/ENET_TXD0/T0_MAT3/CAN1_RD
{8} ETH_REF_CLK			M11	P1_19/ENET_TX_CLK(ENET_REF_CLK)/SSP1_SCK/CLKOUT/I2S0_RX_MCLK/I2S1_TX_SCK
{8} ETH_TXD1			M10	P1_20/GPIO0[15]SSP1_SSEL/ENET_TXD1/T0_CAP2
{6,10} EMC_A13		EMC_A13	T16	P2_0/U0_TXD/EMC_A13/USB0_PPWR/GPIO5[0]/T3_CAP0/ENET_MDC/_____USART0
{6,10} EMC_A12		EMC_A12	N15	P2_1/U0_RXD/EMC_A12/USB0_PWR_FAULT/GPIO5[1]/T3_CAP1/_____USART0
{6} EMC_A11		EMC_A11	M15	P2_2/U0_UCLK/EMC_A11/USB0_IND1/GPIO5[2]/CTIN_6/T3_CAP2
{10} TXD3			J12	P2_3/I2C1_SDA/U3_TXD/CTIN_1/GPIO5[3]/T3_MAT0/USB0_PPWR/_____USART3
{10} RXD3			K11	P2_4/I2C1_SCL/U3_RXD/CTIN_0/GPIO5[4]/T3_MAT1/USB0_PWR_FAULT/_____USART3
{10} USB1_VBUS			K14	P2_5/CTIN_2/USB1_VBUS/ADCTRIG1/GPIO5[5]/T3_MAT2/USB0_IND0
{6} EMC_A10		EMC_A10	K16	P2_6/U0_DIR/EMC_A10/USB0_IND0/GPIO5[6]/CTIN_7/T3_CAP3
{6,10} EMC_A9		EMC_A9	H14	P2_7/GPIO0[7]/CTOUT_1/U3_UCLK/EMC_A9/T3_MAT3/_____ISP_entry
{6,11} EMC_A8		EMC_A8	J16	P2_8/CTOUT_0/U3_DIR/EMC_A8/GPIO5[7]/_____boot_mode
{6,11} EMC_A0		EMC_A0	H16	P2_9/GPIO1[10]/CTOUT_3/U3_BAUD/EMC_A0/_____boot_mode
{6} EMC_A1		EMC_A1	G16	P2_10/GPIO0[14]/CTOUT_2/U2_TXD/EMC_A1
{6} EMC_A2		EMC_A2	F16	P2_11/GPIO1[11]/CTOUT_5/U2_RXD/EMC_A2
{6} EMC_A3		EMC_A3	E15	P2_12/GPIO1[12]/CTOUT_4/EMC_A3/U2_UCLK
{6} EMC_A4		EMC_A4	C16	P2_13/GPIO1[13]/CTIN_4/EMC_A4/U2_DIR
{7} I2S_TX_SCK			F13	P3_0/I2S0_RX_SCK/I2S0_RX_MCLK/I2S0_TX_SCK/I2S0_TX_MCLK/SSP0_SCK
{9} CAN_RD0			G11	P3_1/I2S0_TX_WS/I2S0_RX_WS/CAN0_RD/USB1_IND1/GPIO5[8]/LCD_VD15
{9} CAN_TD0			F11	P3_2/I2S0_TX_SDA/I2S0_RX_SDA/CAN0_TD/USB1_IND0/GPIO5[9]/LCD_VD14
{6} SPIFI_SCK			B14	P3_3/SSP0_SCK/SPIFI_SCK/CGU_OUT1/I2S0_TX_MCLK/I2S1_TX_SCK
{6} SPIFI_SIO3			A15	P3_4/GPIO1[14]/SPIFI_SIO3/U1_TXD/I2S0_TX_WS/I2S1_RX_SDA/LCD_VD13
{6} SPIFI_SIO2			C12	P3_5/GPIO1[15]/SPIFI_SIO2/U1_RXD/I2S0_TX_SDA/I2S1_RX_WS/LCD_VD12
{6} SPIFI_MISO			B13	P3_6/GPIO0[6]/SSP0_SSEL/SPIFI_MISO/SSP0_MISO
{6,12} SPIFI_MOSI			C11	P3_7/SSP0_MISO/SPIFI_MOSI/GPIO5[10]/SSP0_MOSI
{6} SPIFI_nCS			C10	P3_8/SSP0_MOSI/SPIFI_CS/GPIO5[11]/SSP0_SSEL
{11} NMI			D5	P4_0/GPIO2[0]/MCOA0/NMI/LCD_VD13/U3_UCLK
{12} LCDVD0			A1	P4_1/GPIO2[1]/CTOUT_1/LCD_VD0/LCD_VD19/U3_TXD/ENET_COL/ADC0_1
{12} LCDVD3			D3	P4_2/GPIO2[2]/CTOUT_0/LCD_VD3/LCD_VD12/U3_RXD
{12} LCDVD2			C2	P4_3/GPIO2[3]/CTOUT_3/LCD_VD2/LCD_VD21/U3_BAUD/ADC0_0
{12} LCDVD1			B1	P4_4/GPIO2[4]/CTOUT_2/LCD_VD1/LCD_VD20/U3_DIR/DAC
{12} LCD_FP			D2	P4_5/GPIO2[5]/CTOUT_5/LCD_FP
{12} LCD_DEN			C1	P4_6/GPIO2[6]/CTOUT_4/LCD_ENAB/LCDM
{12} LCDDCLK			H4	P4_7/LCD_DCLK/GP_CLKIN/I2S1_TX_SCK/I2S0_TX_SCK
{12} LCDVD9			E2	P4_8/CTIN_5/LCD_VD9/GPIO5[12]/LCD_VD22/CAN1_TD
{12} LCDVD11			L2	P4_9/CTIN_6/LCD_VD11/GPIO5[13]/LCD_VD15/CAN1_RD
{12} LCDVD10			M3	P4_10/CTIN_2/LCD_VD10/GPIO5[14]/LCD_VD14

EMC_D[0..15] {4,6}
EMC_D0
EMC_D1
EMC_D2
EMC_D3
EMC_D4
EMC_D5
EMC_D6
EMC_D7

EMC_A[0..22] {4,5,6,10,11}
EMC_A0
EMC_A1
EMC_A2
EMC_A3
EMC_A4
EMC_A5
EMC_A6
EMC_A7
EMC_A8
EMC_A9
EMC_A10
EMC_A11
EMC_A12
EMC_A13

MYiR	http://www.myir-tech.com	
	Title: MYD-LPC435X/185X	
Size: A3	Document Number: LPC435X/185X-II	Rev: A
Draw By: MYIR	Date: Monday, July 22, 2013	Sheet: 3 of 12

U1B
LPC4357FET256 / LPC4350FET256 / LPC1857FET256 / LPC1850FET256

2/4

{6}	EMC_D12	EMC_D12	N3	P5_0/GPIO2[9]/MCOB2/EMC_D12/U1_DSR/T1_CAP0
{6}	EMC_D13	EMC_D13	P3	P5_1/GPIO2[10]/MCI2/EMC_D13/U1_DTR/T1_CAP1
{6}	EMC_D14	EMC_D14	R4	P5_2/GPIO2[11]/MCI1/EMC_D14/U1_RTS/T1_CAP2
{6}	EMC_D15	EMC_D15	T8	P5_3/GPIO2[12]/MCI0/EMC_D15/U1_RI/T1_CAP3
{6}	EMC_D8	EMC_D8	P9	P5_4/GPIO2[13]/MCOB0/EMC_D8/U1_CTS/T1_MAT0
{6}	EMC_D9	EMC_D9	P10	P5_5/GPIO2[14]/MCOA1/EMC_D9/U1_DCD/T1_MAT1
{6}	EMC_D10	EMC_D10	T13	P5_6/GPIO2[15]/MCOB1/EMC_D10/U1_TXD/T1_MAT2
{6}	EMC_D11	EMC_D11	R12	P5_7/GPIO2[7]/MCOA2/EMC_D11/U1_RXD/T1_MAT3
{7}	I2S_RX_SCK		M12	P6_0/I2S0_RX_MCLK/I2S0_RX_SCK
{7}	I2S_RX_WS		R15	P6_1/GPIO3[0]/EMC_DYCS1/U0_UCLK/I2S0_RX_WS/T2_CAP0
{7}	I2S_RX_SDA		L13	P6_2/GPIO3[1]/EMC_CKEOUT1/U0_DIR/I2S0_RX_SDA/T2_CAP1
{10}	USB0_PPWR		P15	P6_3/GPIO3[2]/USB0_PPWR/EMC_CS1/T2_CAP2
{6}	EMC_CAS		R16	P6_4/GPIO3[3]/CTIN_6/U0_TXD/EMC_CAS
{6}	EMC_RAS		P16	P6_5/GPIO3[4]/CTOUT_6/U0_RXD/EMC_RAS
			L14	P6_6/GPIO0[5]/EMC_BLS1/USB0_PWR_FAULT/T2_CAP3
{6}	EMC_A15	EMC_A15	J13	P6_7/EMC_A15/USB0_IND1/GPIO5[15]/T2_MAT0
{6}	EMC_A14	EMC_A14	H13	P6_8/EMC_A14/USB0_IND0/GPIO5[16]/T2_MAT1
{6}	EMC_DYCS0		J15	P6_9/GPIO3[5]/EMC_DYCS0/T2_MAT2
{6}	EMC_DQM1		H15	P6_10/GPIO3[6]/MCABORT/EMC_DQMOUT1
{6}	EMC_CKE0		H12	P6_11/GPIO3[7]/EMC_CKEOUT0/T2_MAT3
{6}	EMC_DQM0		G15	P6_12/GPIO2[8]/CTOUT_7/EMC_DQMOUT0
			B16	P7_0/GPIO3[8]/CTOUT_14/LCD_LE
{12}	LCDVD19		C14	P7_1/GPIO3[9]/CTOUT_15/I2S0_TX_WS/LCD_VD19/LCD_VD7/U2_TXD
{12}	LCDVD18		A16	P7_2/GPIO3[10]/CTIN_4/I2S0_TX_SDA/LCD_VD18/LCD_VD6/U2_RXD
{12}	LCDVD17		C13	P7_3/GPIO3[11]/CTIN_3/LCD_VD17/LCD_VD5
{12}	LCDVD16		C8	P7_4/GPIO3[12]/CTOUT_13/LCD_VD16/LCD_VD4/TRACEDATA[0]/ADC0_4
{12}	LCDVD8		A7	P7_5/GPIO3[13]/CTOUT_12/LCD_VD8/LCD_VD23/TRACEDATA[1]/ADC0_3
{12}	LCD_LP		C7	P7_6/GPIO3[14]/CTOUT_11/LCD_LP/TRACEDATA[2]
{12}	LCD_DISP		B6	P7_7/GPIO3[15]/CTOUT_8/LCD_PWR/TRACEDATA[3]/ENET_MDC/ADC1_6
{10}	USB0_FAULT		E5	P8_0/GPIO4[0]/USB0_PWR_FAULT/MCI2/T0_MAT0
{12}	LCD_PWM		H5	P8_1/GPIO4[1]/USB0_IND1/MCI1/T0_MAT1
{12}	LCD_INT		K4	P8_2/GPIO4[2]/USB0_IND0/MCI0/T0_MAT2
{12}	LCDVD12		J3	P8_3/GPIO4[3]/USB1_ULPI_D2/LCD_VD12/LCD_VD19/T0_MAT3
{12}	LCDVD7		J2	P8_4/GPIO4[4]/USB1_ULPI_D1/LCD_VD7/LCD_VD16/T0_CAP0
{12}	LCDVD6		J1	P8_5/GPIO4[5]/USB1_ULPI_D0/LCD_VD6/LCD_VD8/T0_CAP1
{12}	LCDVD5		K3	P8_6/GPIO4[6]/USB1_ULPI_NXT/LCD_VD5/LCD_LP/T0_CAP2
{12}	LCDVD4		K1	P8_7/GPIO4[7]/USB1_ULPI_STP/LCD_VD4/LCD_PWR/T0_CAP3
{12}	LCD_RST		L1	P8_8/USB1_ULPI_CLK/CGU_OUT0/I2S1_TX_MCLK
			T1	P9_0/GPIO4[12]/MCABORT/ENET_CRS/SSP0_SSEL
{12}	LCD_GPIO		N6	P9_1/GPIO4[13]/MCOA2/I2S0_TX_WS/ENET_RX_ER/SSP0_MISO
{7}	I2S_TX_WS		N8	P9_2/GPIO4[14]/MCOB2/I2S0_TX_SDA/ENET_RXD3/SSP0_MOSI
{7}	I2S_TX_SDA		M6	P9_3/GPIO4[15]/MCOA0/USB1_IND1/ENET_RXD2/U3_TXD
{12}	P9_3		N10	P9_4/MCOB0/USB1_IND0/GPIO5[17]/ENET_TXD2/U3_RXD
{12}	P9_4		M9	P9_5/MCOA1/USB1_PPWR/GPIO5[18]/ENET_TXD3/U0_TXD
{10}	USB1_PPWR		L11	P9_6/GPIO4[11]/MCOB1/USB1_PWR_FAULT/ENET_COL/U0_RXD
{10}	USB1_FAULT			
			L12	PA_0/I2S1_RX_MCLK/CGU_OUT1
			J14	PA_1/GPIO4[8]/QEI_IDX/U2_TXD
{12}	TXD2		K15	PA_2/GPIO4[9]/QEI_PHB/U2_RXD
{12}	RXD2		H11	PA_3/GPIO4[10]/QEI_PHA
{7}	AUDIO_REST		G13	PA_4/CTOUT_9/EMC_A23/GPIO5[19]

EMC_D[0..15] {3,6}

EMC_D8
EMC_D9
EMC_D10
EMC_D11
EMC_D12
EMC_D13
EMC_D14
EMC_D15

EMC_A[0..22] {3,5,6,10,11}

EMC_A14
EMC_A15

MYiR	http://www.myir-tech.com		
	Title: MYD-LPC435X/185X		
Size: A3	Document Number: LPC435X/185X-III		Rev: A
Draw By: MYIR	Date: Monday, July 22, 2013		Sheet: 4 of 12

U1C
LPC4357FET256 / LPC4350FET256 / LPC1857FET256 / LPC1850FET256

3/4

{12} LCDVD23		B15	PB_0/CTOUT_10/LCD_VD23/GPIO5[20]
{12} LCDVD22		A14	PB_1/USB1_ULPI_DIR/LCD_VD22/GPIO5[21]/CTOUT_6
{12} LCDVD21		B12	PB_2/USB1_ULPI_D7/LCD_VD21/GPIO5[22]/CTOUT_7
{12} LCDVD20		A13	PB_3/USB1_ULPI_D6/LCD_VD20/GPIO5[23]/CTOUT_8
{12} LCDVD15		B11	PB_4/USB1_ULPI_D5/LCD_VD15/GPIO5[24]/CTIN_5
{12} LCDVD14		A12	PB_5/USB1_ULPI_D4/LCD_VD14/GPIO5[25]/CTIN_7/LCD_PWR
{12} LCDVD13		A6	PB_6/USB1_ULPI_D3/LCD_VD13/GPIO5[26]/CTIN_6/LCD_VD19/ADC0_6
{9} SD_CLK		D4	PC_0/USB1_ULPI_CLK/ENET_RX_CLK/LCD_DCLK/SD_CLK/ADC1_1
{8} ETH_MDC		E4	PC_1/USB1_ULPI_D7/U1_RI/ENET_MDC/GPIO6[0]/T3_CAP0/SD_VOLT0
{11} KEY1		F6	PC_2/USB1_ULPI_D6/U1_CTS/ENET_TXD2/GPIO6[1]/SD_RST
{11} KEY2		F5	PC_3/USB1_ULPI_D5/U1_RTS/ENET_TXD3/GPIO6[2]/SD_VOLT1/ADC1_0
{9} SD_DAT0		F4	PC_4/USB1_ULPI_D4/ENET_TX_EN/GPIO6[3]/T3_CAP1/SD_DAT0
{9} SD_DAT1		G4	PC_5/USB1_ULPI_D3/ENET_TX_ER/GPIO6[4]/T3_CAP2/SD_DAT1
{9} SD_DAT2		H6	PC_6/USB1_ULPI_D2/ENET_RXD2/GPIO6[5]/T3_CAP3/SD_DAT2
{9} SD_DAT3		G5	PC_7/USB1_ULPI_D1/ENET_RXD3/GPIO6[6]/T3_MAT0/SD_DAT3
{9} SD_CD		N4	PC_8/USB1_ULPI_D0/ENET_RX_DV/GPIO6[7]/T3_MAT1/SD_CD
{8} ETH_RX_ER		K2	PC_9/USB1_ULPI_NXT/ENET_RX_ER/GPIO6[8]/T3_MAT2/SD_POW
{9} SD_CMD		M5	PC_10/USB1_ULPI_STP/U1_DSR/GPIO6[9]/T3_MAT3/SD_CMD
{11} LED4		L5	PC_11/USB1_ULPI_DIR/U1_DCD/GPIO6[10]/SD_DAT4
{9} DTR1		L6	PC_12/U1_DTR/GPIO6[11]/I2S0_TX_SDA/SD_DAT5
{9} TXD1		M1	PC_13/U1_TXD/GPIO6[12]/I2S0_TX_WS/SD_DAT6
{9} RXD1		N1	PC_14/U1_RXD/GPIO6[13]/ENET_TX_ER/SD_DAT7
{11} LED6		N2	PD_0/CTOUT_15/EMC_DQMOUT2/GPIO6[14]
{11} LED1		P1	PD_1/EMC_CKEOUT2/GPIO6[15]/SD_POW
{11} LED2		R1	PD_2/CTOUT_7/EMC_D16/GPIO6[16]
{11} LED3		P4	PD_3/CTOUT_6/EMC_D17/GPIO6[17]
{12} PD4		T2	PD_4/CTOUT_8/EMC_D18/GPIO6[18]
{12} PD5		P6	PD_5/CTOUT_9/EMC_D19/GPIO6[19]
{12} PD6		R6	PD_6/CTOUT_10/EMC_D20/GPIO6[20]
{12} PD7		T6	PD_7/CTIN_5/EMC_D21/GPIO6[21]
{12} PD8		P8	PD_8/CTIN_6/EMC_D22/GPIO6[22]
{12} PD9		T11	PD_9/CTOUT_13/EMC_D23/GPIO6[23]
{12} PD10		P11	PD_10/CTIN_1/EMC_BLS3/GPIO6[24]
{12} PD11		N9	PD_11/EMC_CS3/GPIO6[25]/USB1_ULPI_D0/CTOUT_14
{12} PD12		N11	PD_12/EMC_CS2/GPIO6[26]/CTOUT_10
{12} PD13		T14	PD_13/CTIN_0/EMC_BLS2/GPIO6[27]/CTOUT_13
{12} PD14		R13	PD_14/EMC_DYCS2/GPIO6[28]/CTOUT_11
{6} EMC_A17	EMC_A17	T15	PD_15/EMC_A17/GPIO6[29]/SD_WP/CTOUT_8
{6} EMC_A16	EMC_A16	R14	PD_16/EMC_A16/GPIO6[30]/SD_VOLT2/CTOUT_12
{6} EMC_A18	EMC_A18	P14	PE_0/EMC_A18/GPIO7[0]/CAN1_TD
{6} EMC_A19	EMC_A19	N14	PE_1/EMC_A19/GPIO7[1]/CAN1_RD
{6} EMC_A20	EMC_A20	M14	PE_2/ADCTRIG0/CAN0_RD/EMC_A20/GPIO7[2]
{6} EMC_A21	EMC_A21	K12	PE_3/CAN0_TD/ADCTRIG1/EMC_A21/GPIO7[3]
{6} EMC_A22	EMC_A22	K13	PE_4/NMI/EMC_A22/GPIO7[4]
{12} PE_5		N16	PE_5/CTOUT_3/U1_RTS/EMC_D24/GPIO7[5]
{12} PE_6		M16	PE_6/CTOUT_2/U1_RI/EMC_D25/GPIO7[6]
{12} PE_7		F15	PE_7/CTOUT_5/U1_CTS/EMC_D26/GPIO7[7]
{12} PE_8		F14	PE_8/CTOUT_4/U1_DSR/EMC_D27/GPIO7[8]
{12} PE_9		E16	PE_9/CTIN_4/U1_DCD/EMC_D28/GPIO7[9]
{12} PE_10		E14	PE_10/CTIN_3/U1_DTR/EMC_D29/GPIO7[10]
{12} PE_11		D16	PE_11/CTOUT_12/U1_TXD/EMC_D30/GPIO7[11]
{12} PE_12		D15	PE_12/CTOUT_11/U1_RXD/EMC_D31/GPIO7[12]
{12} I2C1_SDA		G14	PE_13/CTOUT_14/I2C1_SDA/EMC_DQMOUT3/GPIO7[13]
{11} LED5		C15	PE_14/EMC_DYCS3/GPIO7[14]
{12} I2C1_SCL		E13	PE_15/CTOUT_0/I2C1_SCL/EMC_CKEOUT3/GPIO7[15]
{12} SSP0_SCK		D12	PF_0/SSP0_SCK/GP_CLKIN/I2S1_TX_MCLK
{12} SSP0_SSEL		E11	PF_1/SSP0_SSEL/GPIO7[16]
{12} SSP0_MISO		D11	PF_2/U3_TXD/SSP0_MISO/GPIO7[17]
{12} TS_INT		E10	PF_3/U3_RXD/SSP0_MOSI/GPIO7[18]
{12} SSP1_SCK		D10	PF_4/SSP1_SCK/GP_CLKIN/TRACECLK/I2S0_TX_MCLK/I2S0_RX_SCK
{12} SSP1_SSEL		E9	PF_5/U3_UCLK/SSP1_SSEL/TRACEDATA[0]/GPIO7[19]/ADC1_4
{12} SSP1_MISO		E7	PF_6/U3_DIR/SSP1_MISO/TRACEDATA[1]/GPIO7[20]/I2S1_TX_SDA/ADC1_3
{12} SSP1_MOSI		B7	PF_7/U3_BAUD/SSP1_MOSI/TRACEDATA[2]/GPIO7[21]/I2S1_TX_WS/ADC1_7
{12} U0_CLK		E6	PF_8/U0_UCLK/CTIN_2/TRACEDATA[3]/GPIO7[22]/ADC0_2
{12} U0_DIR		D6	PF_9/U0_DIR/CTOUT_1/GPIO7[23]/ADC1_2
{12} U0_TXD		A3	PF_10/U0_TXD/GPIO7[24]/SD_WP/ADC0_5
{12} U0_RXD		A2	PF_11/U0_RXD/GPIO7[25]/SD_VOLT2/ADC1_5

EMC_A[0..22] {3,4,6,10,11}

EMC_A16
EMC_A17
EMC_A18
EMC_A19
EMC_A20
EMC_A21
EMC_A22

MYiR	http://www.myir-tech.com	
	Title: MYD-LPC435X/185X	
Size: A3	Document Number: LPC435X/185X-IV	Rev: A
Draw By: MYIR	Date: Monday, July 22, 2013	Sheet: 5 of 12

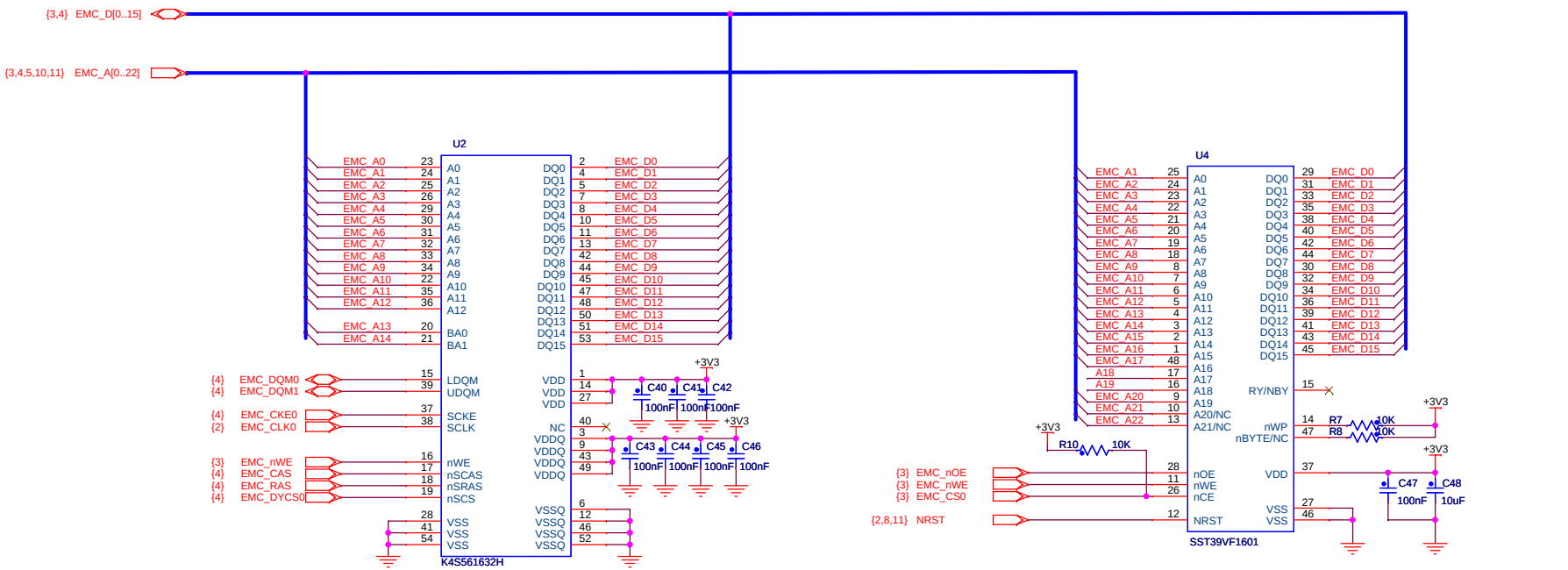

SDRAM

Nor Flash

SPI Flash

MYiR	http://www.myir-tech.com	
	Title: MYD-LPC435X/185X	
Size: A3	Document Number: Memory,Flash	Rev: A
Draw By: MYIR	Date: Monday, December 10, 2012	Sheet: 6 of 12

Audio

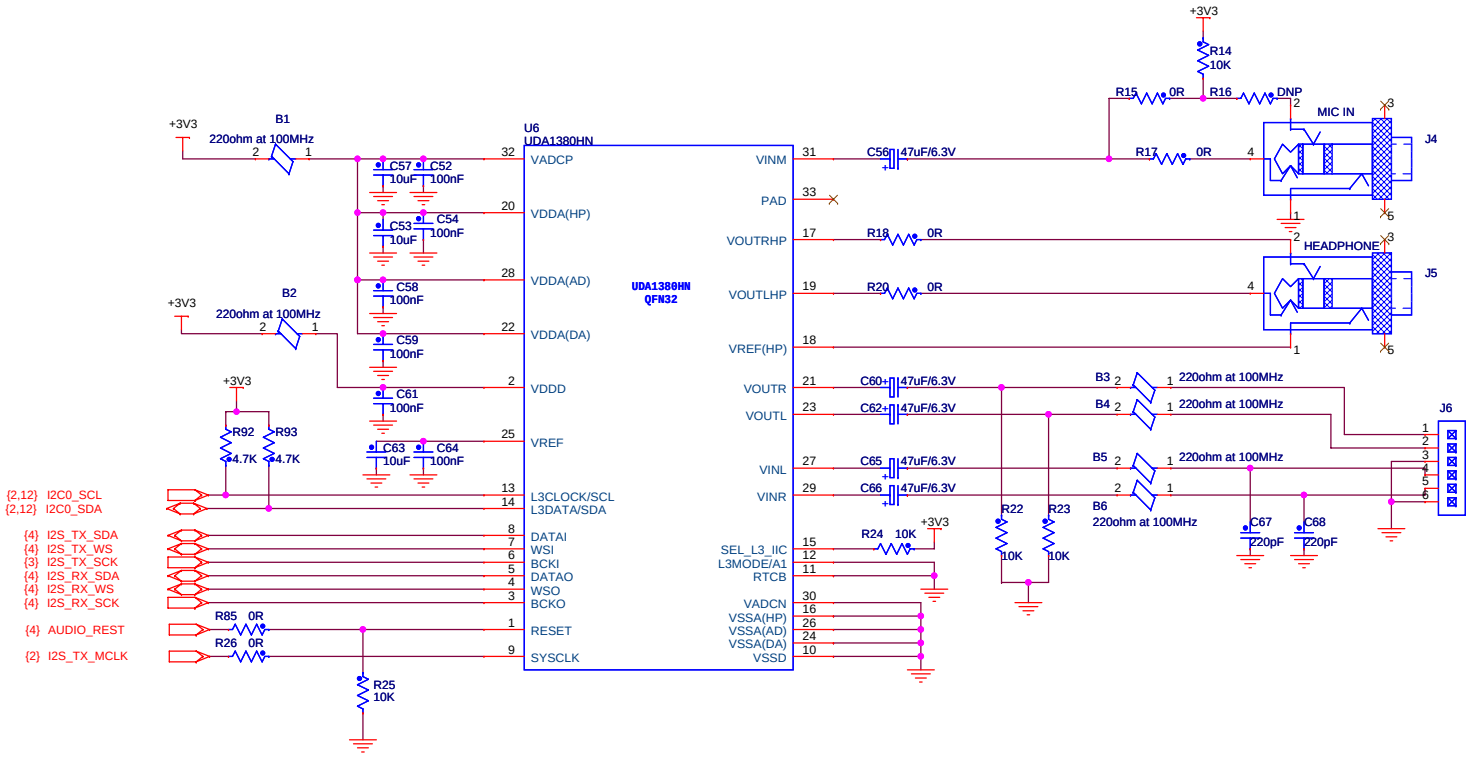

MYiR	http://www.myir-tech.com	
	Title: MYD-LPC435X/185X	
Size: A3	Document Number: Audio	Rev: A
Draw By: MYIR	Date: Monday, December 10, 2012	Sheet: 7 of 12

Ethernet

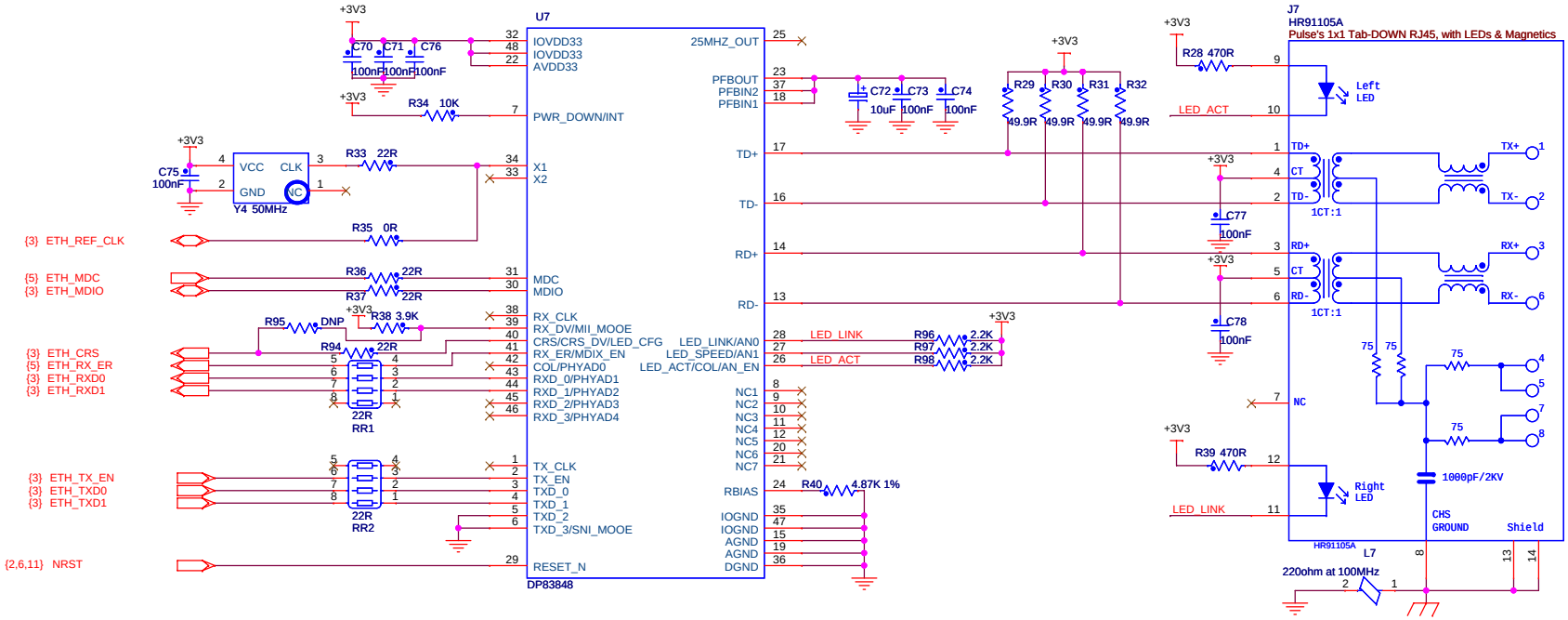

MYiR	http://www.myir-tech.com	
	Title: MYD-LPC435X/185X	
Size: A3	Document Number: Ethernet	Rev: A
Draw By: MYIR	Date: Monday, December 10, 2012	Sheet: 8 of 12

CAN & RS485

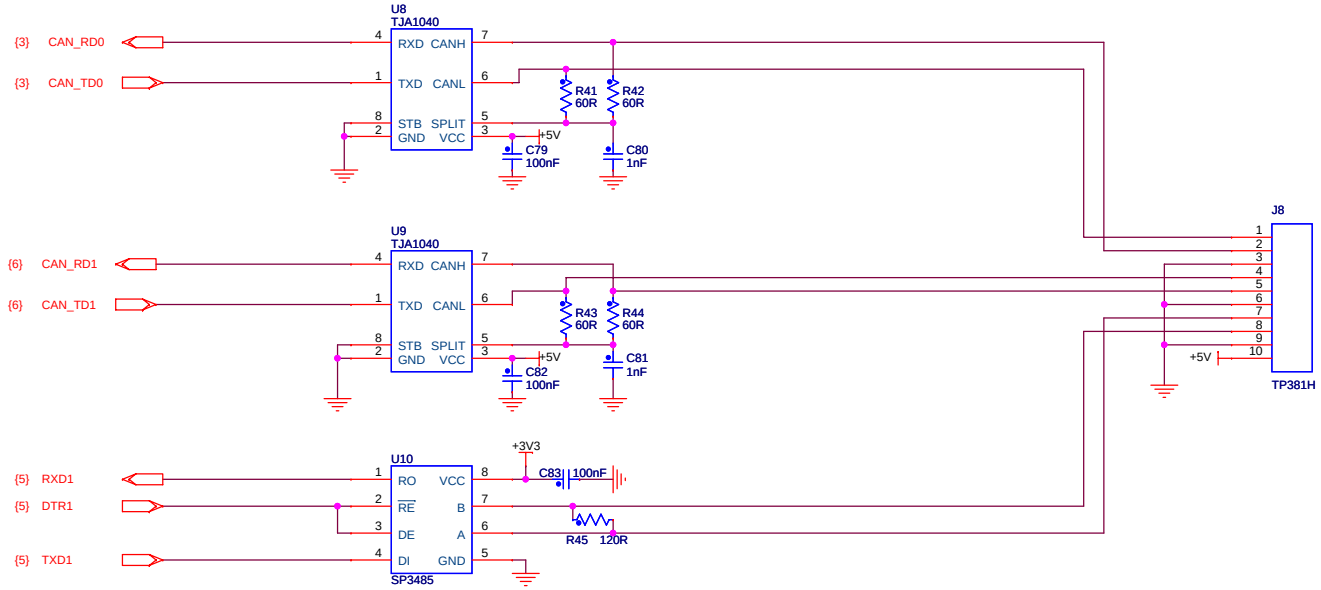

Micro SD Card

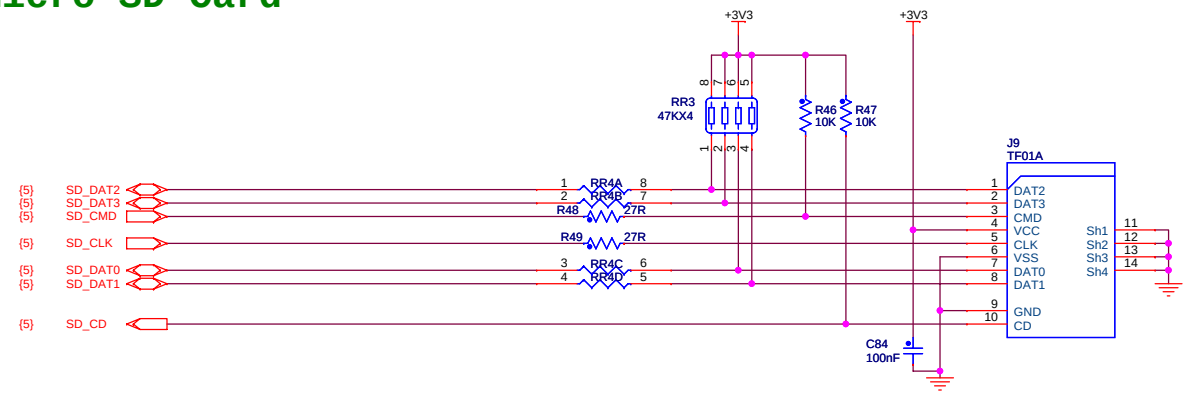

MYiR	http://www.myir-tech.com	
	Title: MYD-LPC435X/185X	
Size: A3	Document Number: SD CARD,CAN,RS485	Rev: A
Draw By: MYIR	Date: Monday, December 10, 2012	Sheet: 9 of 12

UART

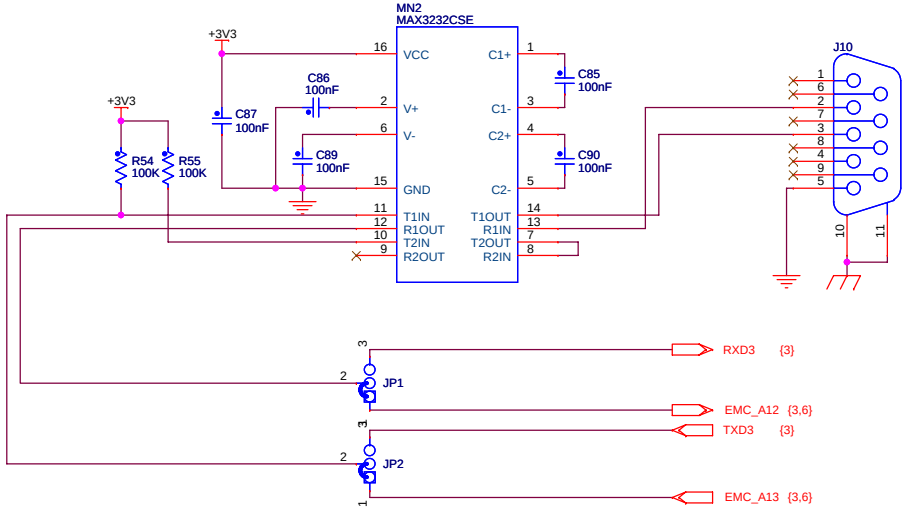

USB Host

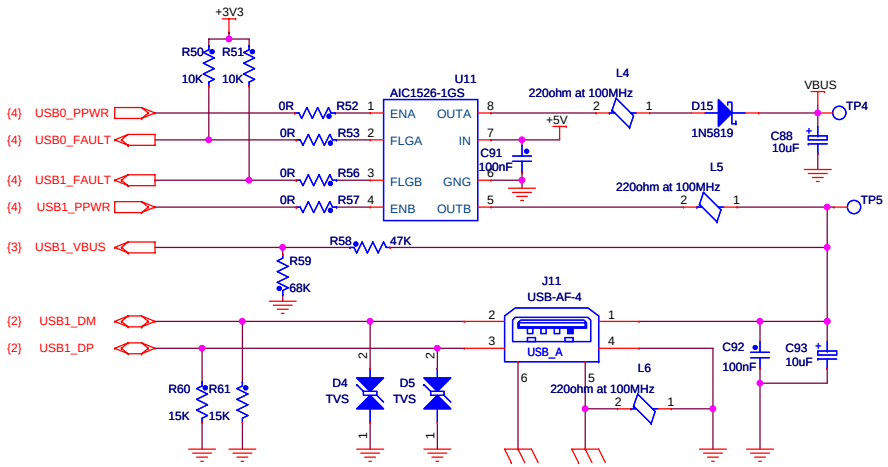

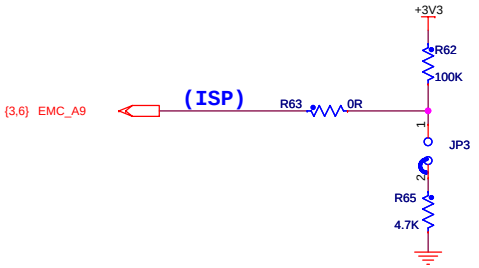

USB OTG

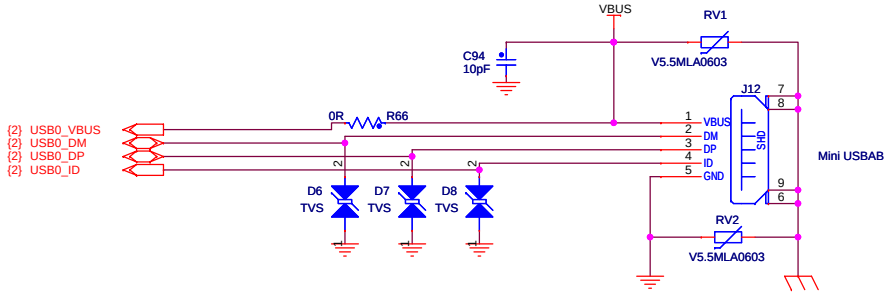

MYiR	http://www.myir-tech.com	
	Title: MYD-LPC435X/185X	
Size: A3	Document Number: USB,UART	Rev: A
Draw By: MYIR	Date: Monday, December 10, 2012	Sheet: 10 of 12

RESET

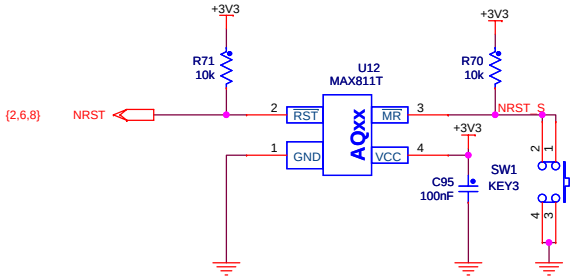

KEY

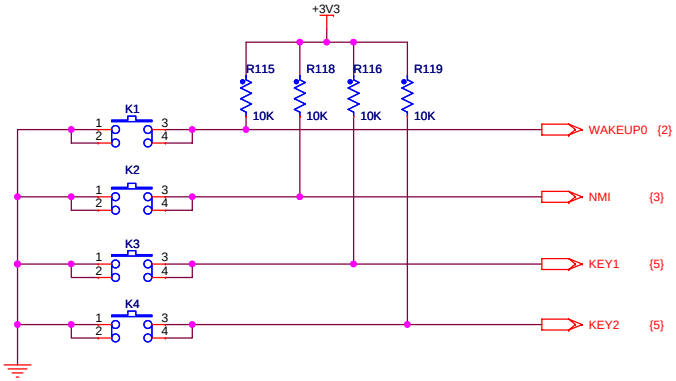

BOOT

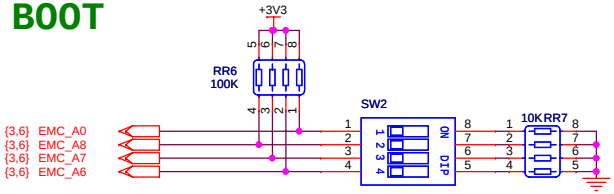

User LED

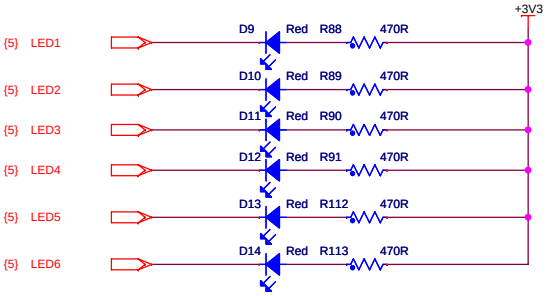

JTAG

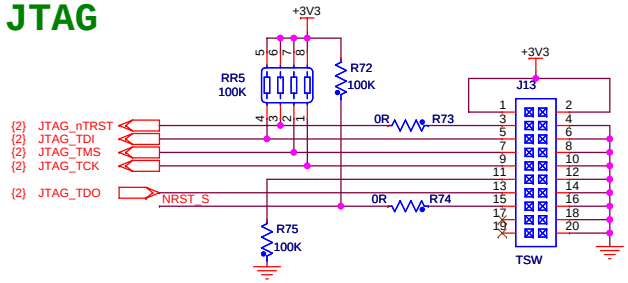

MYiR	http://www.myir-tech.com	
	Title: MYD-LPC435X/185X	
Size: A3	Document Number: I/O Peripheral	Rev: A
Draw By: MYIR	Date: Monday, December 10, 2012	Sheet: 11 of 12

Touch

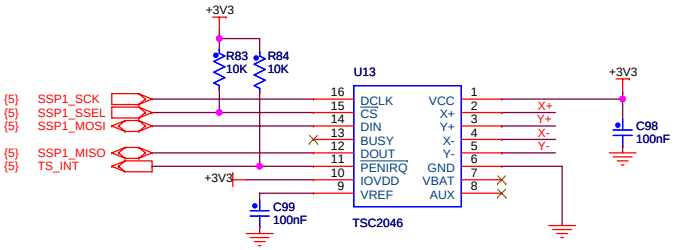

User Interface

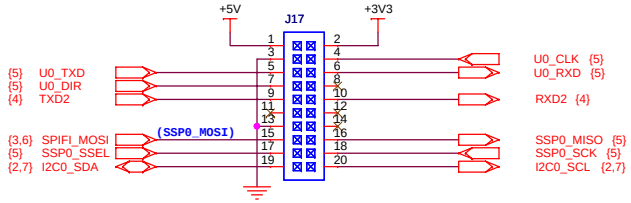

LCD

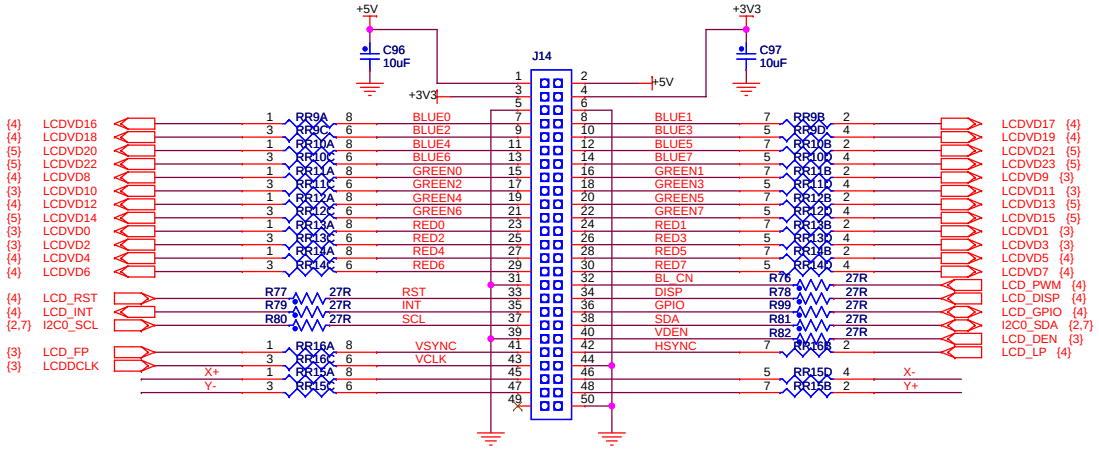

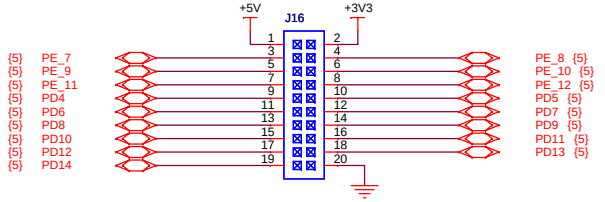

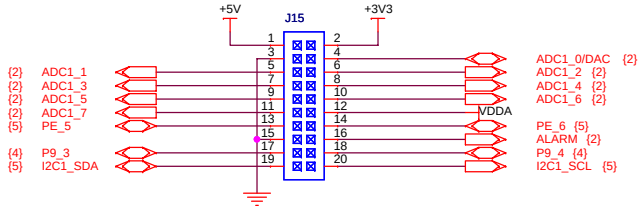

EEPROM

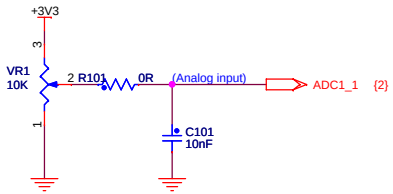

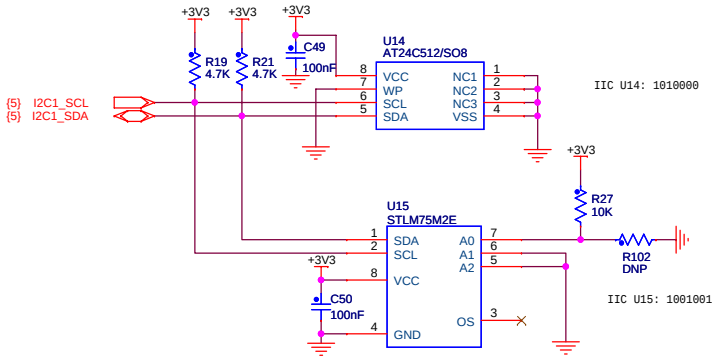

MYiR	http://www.myir-tech.com	
	Title: MYD-LPC435X/185X	
Size: A3	Document Number: LCD,User Interface	Rev: A
Draw By: MYIR	Date: Monday, December 10, 2012	Sheet: 12 of 12